YIBO 以伯®

YB160系列series
通用型IEC插座电源滤波器
Universal IEC socket power filter

产品及应用 PRODUCTS APPLICATIONS

- 具有IEC950标准插座，通用性强
- 外形小巧、结构紧凑、便于安装
- 优秀的传导衰减性能、性价比高
- 适用于电脑、通讯设备、液晶电视、电动玩具等(中) 小型电子设备及电子测量仪器

- It has an IEC950 standard socket, which is highly versatile
- Compact in size, well-structured, and easy to install
- Excellent insertion loss performance, high cost-effectiveness
- It is suitable for computer, communication equipment, LCD TV, electric toys, etc. (Medium) Small electronic devices and electronic measuring

技术参数 SPECIFICATION

最高工作电压 Maximum operating voltage (VAC)	工作频率 Operating frequency Hz	试验电压 Hipot test voltage P-N(VDC)	PN-E(VAC)	工作温度 Operating temperatureHz	绝缘电阻 Minimum insulation resistance
250	50/60	1500	1500	-25~+85°C	>200M@500VDC

产品型号 FILTER	额定电流 Current rating @40°C	泄漏电流 Leakage current	外型尺寸 Housing	电路参数 Components				重量 Weight (g)
				L (mH)	Cx(uF)	R(MΩ)	Cy(nF)	
YB160-1	1A	<0.3mA	I1	5.5	0.1	1.0	2.2	40
YB160-3	3A	<0.3mA	I1	3.0	0.1	1.0	2.2	40
YB160-6	6A	<0.3mA	I1	1.0	0.1	1.0	2.2	40
YB160-10	10A	<0.3mA	I1	0.4	0.1	1.0	2.2	40

电路原理图 CIRCUIT DIAGRAM

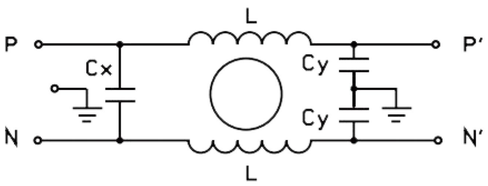

外型尺寸 HOUSING AND DIMENSIONS:（MM）

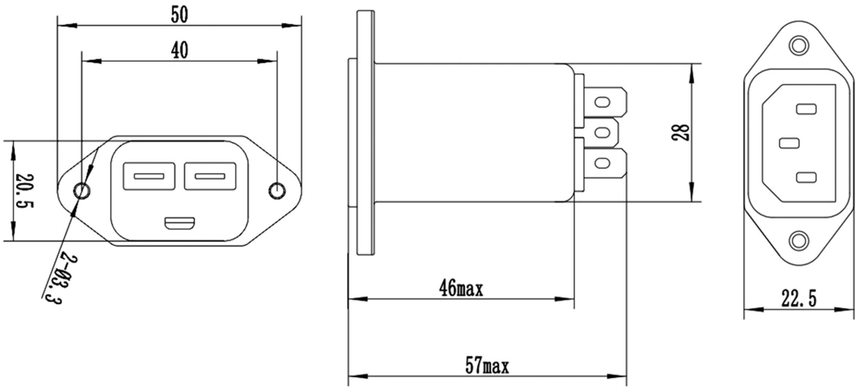

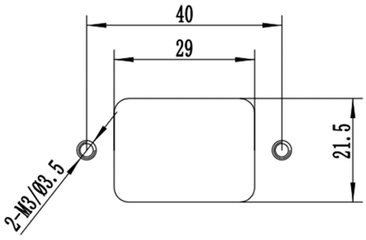

开槽及安装尺寸示意图

I1

插入损耗 INSERTION LOSS IN DB（IN 50/50Ω SYSTEM）

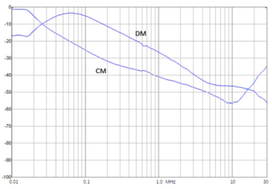

3A

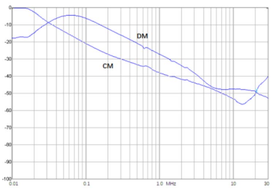

6A

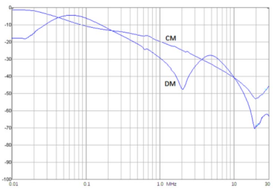

10A