YIBO 以伯®

YB430D系列series
双节直流电源滤波器
Dual-section DC power supply filter

产品及应用 PRODUCTS APPLICATIONS

- ▲ 专为抑制直流电源线上的噪声设计
- ▲ 双节滤波器，优良的低频，高频滤波效果
- ▲ 适应各种阻抗匹配，对快速瞬变脉冲群 (EFT) 等实验具有良好的辅助效果
- ▲ 适用于通讯设备、基站、直放站、程控交换机复印设备、光端机、开关电源等直流供电的各种电子设备

- ▲ Designed specifically to suppress noise on DC power lines
- ▲ Dual-band filter, excellent low-frequency and high-frequency filtering effect
- ▲ Adapts to various impedance matching and has good auxiliary effect on experiments such as EFT
- ▲ It is suitable for various electronic devices supplied with DC power, such as communication equipment, base stations, repeaters, programmable switches, copy machines, optical terminal equipment, and switch power supplies

技术参数 SPECIFICATION

最高工作电压 Maximum operating voltage (VDC)	工作频率 Operating frequency Hz	试验电压 Hipot test voltage P-N(VDC)	PN-E(VDC)	工作温度 Operating temperatureHz	绝缘电阻 Minimum insulation resistance
250	DC	1000	1000	-25~+85°C	>200M@500VDC

产品型号 FILTER	端接方式 Connections		额定电流 Current rating @40°C	外型尺寸 Housing	泄漏电流 Leakage current	电路参数 Components			
	螺栓 Bolts	焊片 Solder				L (mH)	Cx(uF)	Cy(nF)	R(MΩ)
YB430D-3	/M	/L	3A	H1	<0.3mA	6	0.1	2.2	1.0
YB430D-6	/M	/L	6A	H1	<0.3mA	3.7	0.1	2.2	1.0
YB430D-10	/M	/L	10A	H1	<0.3mA	1.7	0.22	2.2	1.0
YB430D-15	/M	/L	15A	H2	<0.3mA	1.0	0.22	2.2	1.0
YB430D-20	/M	/L	20A	H5	<0.5mA	0.75	0.47	4.7	1.0
YB430D-30	/M	---	30A	J	<0.5mA	0.45	0.47	4.7	1.0

电路原理图 CIRCUIT DIAGRAM

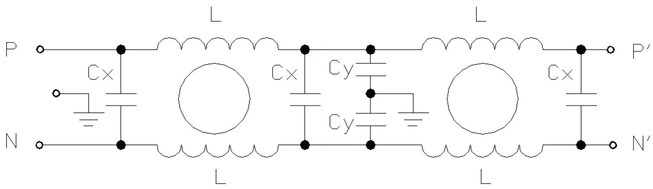

外型尺寸 HOUSING AND DIMENSIONS:（MM）

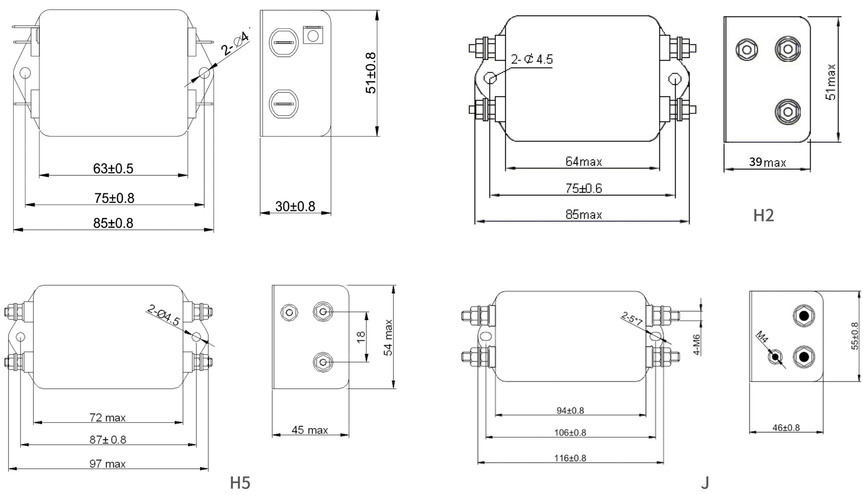
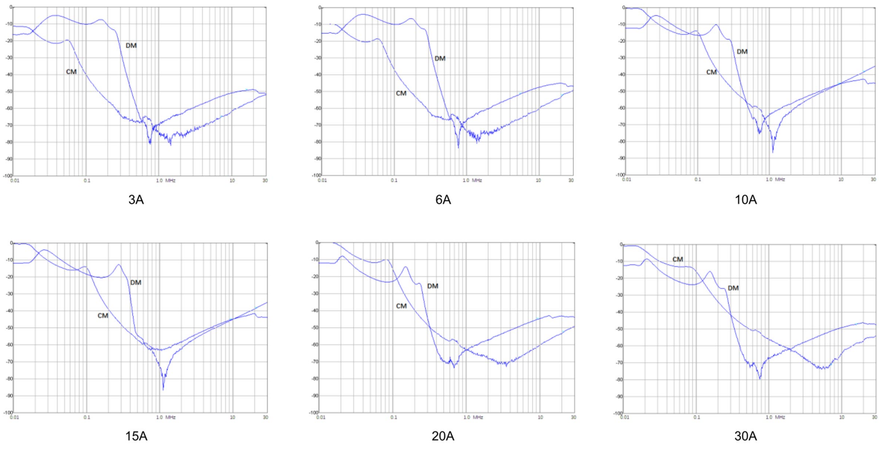
插入损耗 INSERTION LOSS IN DB（IN 50/50Ω SYSTEM）