YIBO 以伯®

YBDK系列series
单相交流电抗器
Single-phase AC reactor

产品及应用 PRODUCTS APPLICATIONS

- 输入交流电抗器接在电源和变频器之间的，它能限制电网电压突变和操作过电压引起的电流冲击，有效的保护变频器并能够改善变频器的功率因数，抑制变频器输入电网的谐波电流
- 输入交流电抗器限制以谐波形式出现的电路反馈。它们还可以降低因为转换直流连接电容器中的输入整流器而导致的交流电流及其频率
- 适用于工业电源、逆变电源、机床设备、变频设备等

- The input AC reactor is connected between the power supply and the inverter. It can limit the current impact caused by sudden changes in grid voltage and overvoltage, effectively protecting the inverter and improving the power factor of the inverter, as well as suppressing the harmonic current input to the grid by theverter.
- The input AC reactors limit circuit feedback that appears in the form of harmonics. They can also reduce the AC current and its frequency that are caused by the input rectifier to the DC link capacitor.
- It is suitable for industrial power supplies, inverter power supplies, machine tools, frequency conversion equipment, etc.

技术参数 SPECIFICATION

1、额定电压：220V/50HZ
2、额定电流：3A~300A
3、绝缘电阻：>100MΩ
4、噪音等级：＜65DB
5、防护等级：IP00
6、抗电强度：铁芯-绕组3500VAC/50HZ/10MA/10S无飞弧击穿
7、执行标准：GB10229-88电抗器/JB9644-1999半导体电气传动用电抗器

1、Rated voltage: 220V/50HZ
2、Rated current: 3A~300A
3、Insulation resistance: >100MΩ
4、Noise level: <65dB
5、Protection level: IP00
6、Dielectric strength: Core to winding 3500VAC/50HZ/10MA/10S no arc breakdown
7、Execution standard: GB10229-88 Reactor/JB9644-1999 Reactor for semiconductor electric

电抗器型号 REACTOR MODEL	图号 FIGURE NUMBER	额定电流 A RATED CURRENT	压降 V PRESSURE DROP	电感 mH INDUCTOR	外型尺寸（mm）OVERALL DIMENSIONS			安装尺寸（mm）INSTALLATION DIMENSIONS	
					L	W	H	A	B
YBDK-3-4.67	A	3	4.4	4.67	80	65	90	55	45
YBDK-5-2.8		5	4.4	2.8	80	65	90	55	45
YBDK-10-1.4		10	4.4	1.4	80	65	90	55	45
YBDK-12-1.167		12	4.4	1.167	85	90	95	65	64
YBDK-15-0.934		15	4.4	0.934	85	90	95	65	64
YBDK-20-0.7		20	4.4	0.7	85	90	95	65	64
YBDK-25-0.56		25	4.4	0.56	96	90	110	84	70
YBDK-30-0.467		30	4.4	0.467	96	90	110	84	70
YBDK-40-0.35		40	4.4	0.35	96	110	110	84	70
YBDK-50-0.28	B	50	4.4	0.28	170	100	160	80	70
YBDK-60-0.233		60	4.4	0.233	170	100	160	80	70
YBDK-80-0.175		80	4.4	0.175	170	120	160	80	90
YBDK-100-0.127		100	4.4	0.14	170	140	160	80	100

外型尺寸 HOUSING AND DIMENSIONS:（MM）

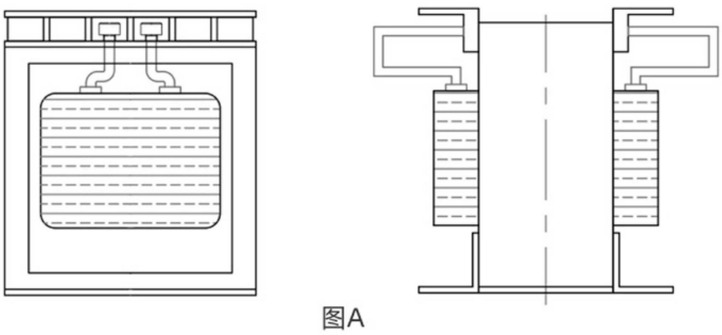

图A

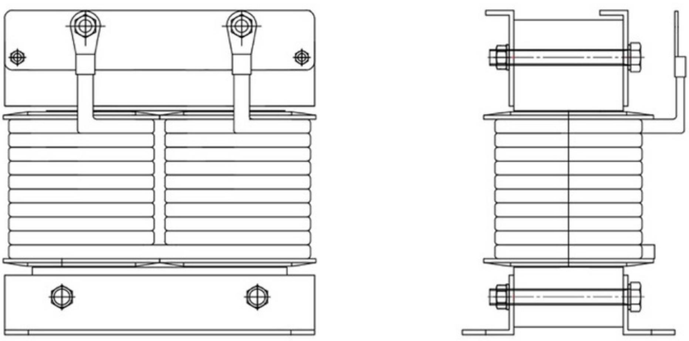

图B